IP65 | 4-20mA 0-10V | RS485 Modbus

Methane Transmitter
E2618-CH4

Features

- Accurate and stable measurement
- Industrial housing, attached or remote sensor
- Two analog outputs settable to 4-20 mA or 0-10 V
- RS485 Modbus RTU digital interface

Specifications
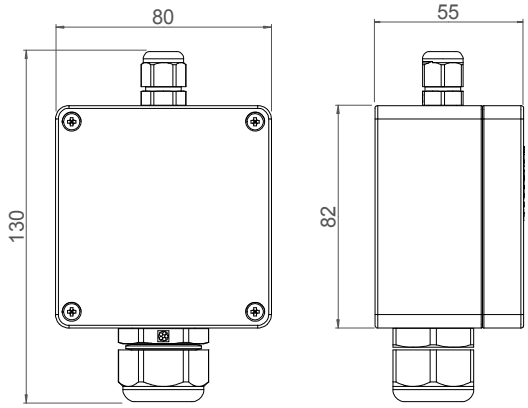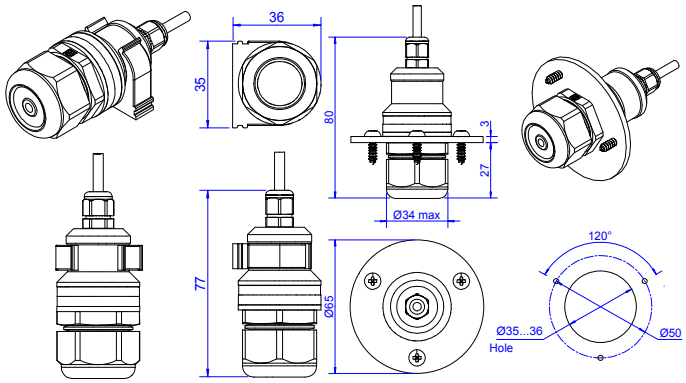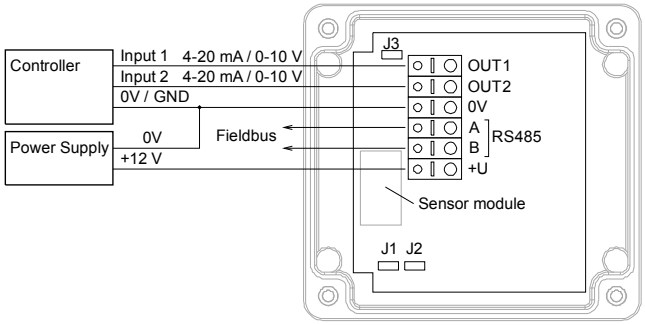
Calibration	Methane CH_4
Sensing method	long-life metal-oxide gas sensor
Sampling method	diffusion
Detection range	0...100% LEL (0...5 %vol) CH_4
Resolution	0,1 %LEL (50 ppm) CH_4
Accuracy	± 5 %LEL (± 0,25 %vol) CH_4
Signal update	every 1 second
Response time	~15 seconds
Maintenance interval	12 months
Sensor lifetime	> 10 years
Self-diagnostics	full functionality check at start-up
Warm-up time	≤ 1 min
Power supply	11...30 VDC
Power consumption	< 2 W
Digital interface	RS485, Modbus RTU protocol
Analog outputs	2 × 4-20 mA / 0-10 V, user settable
Enclosure	light grey ABS plastic, wall mount, protection class IP65
Dimensions	H82 × W80 × D55 mm
Cable options for remote probe	3 m, 10 m, 25 m
Operating environment	industrial indoor and outdoor locations
Operating conditions	-40...+85 °C, 0...100 %RH